Oasis

Refrigerated Self-Service Island Self-Contained

Structural Concepts®
DELIVERING FRESH. ALWAYS.™

- **FSI660R** 80-3/4"L x 48-1/8"D x 60-1/8"H
- **FSI860R** 99-3/4"L x 48-1/8"D x 60-1/8"H

FSI660R

Included

- Breeze self-contained refrigeration
- Compressor air intake in one side & out other side. All louvered panels cannot be blocked
- LED 4000K top light(s)
- One year parts & labor; 5 year compressor warranty
- Price tag molding (matches interior color)
- Removable deck pans provide complete access to evaporator coil & refrigeration connections
- Vinyl T-edge (matches interior color)
- Warmest average product temperature of 40°F or less

Specify	Standard Features	Additional Options
EXTERIOR COLOR	• Laminate (stock colors)	• Laminate (non-stock colors) • Stainless steel
INTERIOR COLOR	• Powder coated Silversan Black	• Stainless steel
LOWER FRONT PANEL COLOR	• Powder coated Silversan Black	• Stainless steel (must choose stainless exterior)
BASE SUPPORT	• Casters w/ levelers	
VINYL GRAPHICS	• None	• Full wrap graphic set
SHELVING	• Non-adjustable metal shelves, non-lighted	• Non-adjustable metal shelves, lighted (LED 4000K)
ELECTRICAL CONNECTION	• 6' Straight blade power cord	• 6' Locking blade power cord
REFRIGERATION	• Breeze self-contained refrigeration	
MISCELLANEOUS		• Second year parts & labor warranty (excludes compressor)

Oasis

Refrigerated Self-Service Island Self-Contained

Structural Concepts®
DELIVERING FRESH. ALWAYS.™

Intended Environment:	Type I - Designed to operate in ambient conditions of 75°F with 55% relative humidity unless noted otherwise in system information below.	
Zone	**Intended Product To Be Displayed**	**Warmest Avg Prod Temp ° F**
1	Packaged refrigerated products	40

PLAN VIEW

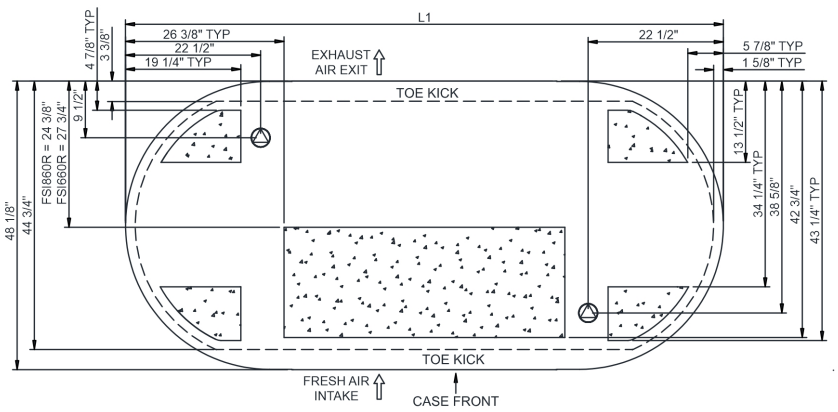

SIDE VIEW

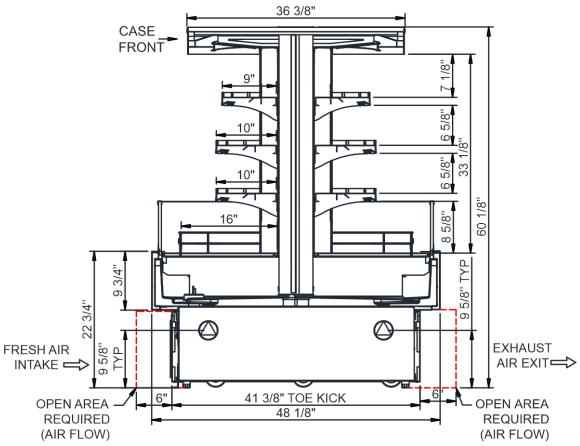

NOTE: ALL DIMENSIONS APPROXIMATE

- ELECTRICAL JUNCTION BOX (SUPPLIED WITH 6" LEADS OR POWER CORD).
- LOCATION OF DRAIN TUBE FOR REMOTE REF. ONLY (SUPPLIED WITH 3/4" OR 1 1/2" PVC TUBE).
- REFRIGERATION LINE CONNECTION.
- REMOTE FLOOR SINK & UTILITIES ACCESS AREA.
- SELF-CONTAINED CASE SERVICE ACCESS AREA.
- DRY CASE SERVICE ACCESS AREA.

Model Technical Specifications

Model	L"	L1"	L2"	System Circuit Volts			Phs	Freq	Amps ***	Watts	Wires	NEMA Plug	SST	Conv. Rack BTUH	Para. Rack BTUH	Est Wt
FSI660R	N/A	80.75	.00	Self-Contained (R290)	Circuit #1	208-240	1	50-60	24.00	4,915	2+G	6-30P or L6-30P	N/A	N/A	N/A	1,250
FSI860R	N/A	99.75	.00	Self-Contained (R290)	Circuit #1	208-240	1	50-60	24.00	4,983	2+G	6-30P or L6-30P	N/A	N/A	N/A	1,600

*** Does not include electric defrost on freezer models.

Regulatory Approvals:	
All Models	Accordance with AHRI Std 1200 ETL Listed to UL 60335-2-89 ETL Sanitation to NSF/ANSI 7

In Accordance with AHRI Std 1200

DOE 2017 Energy Efficiency Compliant

Important Notes:

1) ELECTRICAL NOTE: If GFCI is required, a GFCI breaker MUST be used in lieu of a GFCI receptacle

2) NOTE: Electrical specs reflect highest Amp draw using lighted shelves option

⚠ **WARNING:** This product can expose you to chemicals, including Urethane (Ethyl Carbamate), which are known to the State of California to cause cancer and birth defects or other reproductive harm. For more information go to www.P65Warnings.ca.gov.