Discover the Art of Display...

Project Name: _____

Item #: _____ Quantity: _____

MURO H13-1 & MURO H13-2 Self-Serve Air Screen Refrigeration Showcase

MURO H13-1 MODELS: MURO H13-1-1000, MURO H13-1-1200, MURO H13-1-1500, MURO H13-1-1800, MURO H13-1-2000, MURO H13-1-2400, MURO H13-1-A90SQ, MURO H13-2-A90X, MURO H13-2-A90X
MURO H13-2 MODELS: MURO H13-2-1000, MURO H13-2-1200, MURO H13-2-1500, MURO H13-2-1800, MURO H13-2-2000, MURO H13-2-2400, MURO H13-2-A90SQ, MURO H13-2-A90X

Photo shown in remote application with custom fascia, corner 90° and glass top

Visit our website for optional RAL colors and Materials finishes.

RAL Colors Website

Materials Brochure PDF

STANDARD FEATURES
- Muro H13-1 – (1) shelf
- Muro H13-2 – (2) shelves
- Double pane side glass ends with grey serigraphy
- Dixell digital control
- Diffused LED lighting 3000°K
- Straight or inclined shelf/shelves
- Polished stainless steel interior and exterior
- Self-Contained – Floor Sink Recommended
- Adjustable feet
- Cases ship standard stainless steel interior and exterior
- Roll down night curtain
- Self contained bottom mount (BM) – 43” Deep (standard) or rear mount- RM – 56” deep (optional)
- Muro H13-1-A90X and Muro H13-2-A90X models: available standard remote condensing unit only

OPTIONS
- Stainless steel side panels in lieu of glass
- Remote/water cooled condensing unit
- Remote condensing unit with back shelving: 46” total depth
- Self contained rear mount- RM – 56” deep w/ back shelving
- Roll down night shutter with lock – length increases and solid sides are required. Adds 1-3/4” to each side
- Shelf/shelves fence for inclined position
- Epoxy RAL color interior and exterior over stainless steel
- RAL color/custom plastic wood laminate exterior front and sides
- Unfinished panels to accept millwork by others
- Custom height chassis modification
- Condensate heated pan with fan
- Casters

**Oscartek® reserves the right to change, modify, discontinue, or change any features, sizes, or capacity on any model without prior notice.*

OSCARTEK®
512 South Airport Blvd., South San Francisco, CA 94080
Tel: 855.885.2400 | 650.342.2400 | Fax: 650.342.7400
sales@oscartek.com | www.oscartek.com

12/2024

Project Name: _____

Item #: _____ Quantity: _____

Discover the Art of Display...

MURO H13-1 MODELS: MURO H13-1-1000, MURO H13-1-1200, MURO H13-1-1500, MURO H13-1-1800, MURO H13-1-2000, MURO H13-1-2400, MURO H13-1-A90SQ, MURO H13-2-A90X, MURO H13-2-A90X
MURO H13-2 MODELS: MURO H13-2-1000, MURO H13-2-1200, MURO H13-2-1500, MURO H13-2-1800, MURO H13-2-2000, MURO H13-2-2400, MURO H13-2-A90SQ, MURO H13-2-A90X

STANDARD: MURO H13-1 SELF SERVE – SELF CONTAINED

PLAN VIEWS

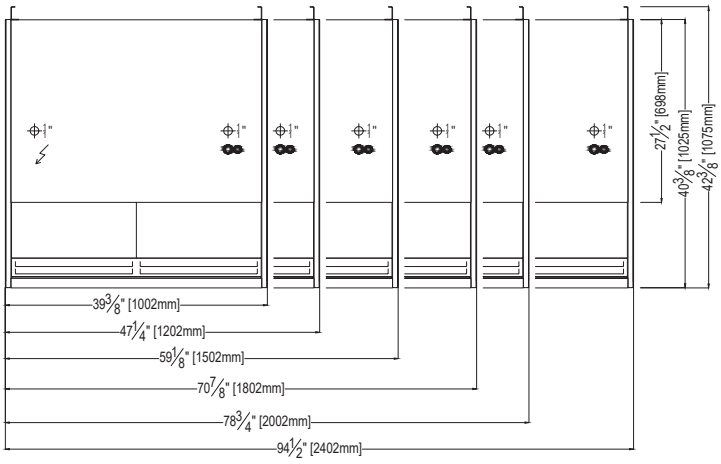

FRONT ELEVATIONS: (CUSTOMER SIDE)

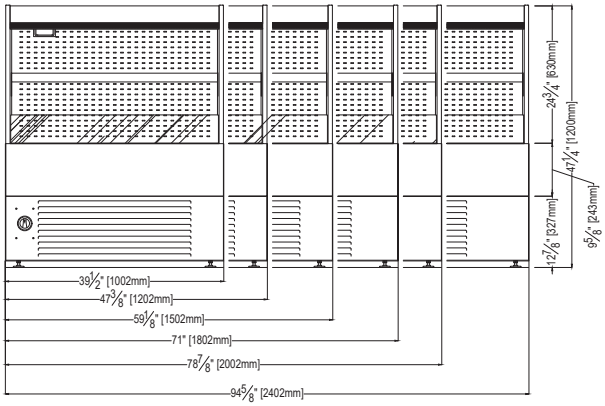

STANDARD: MURO H13-1 A90SQ PLAN VIEW

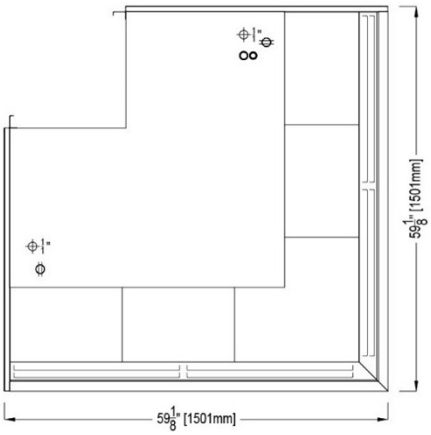

STANDARD: MURO H13-1 A90SQ FRONT ELEVATION (CUSTOMER SIDE)

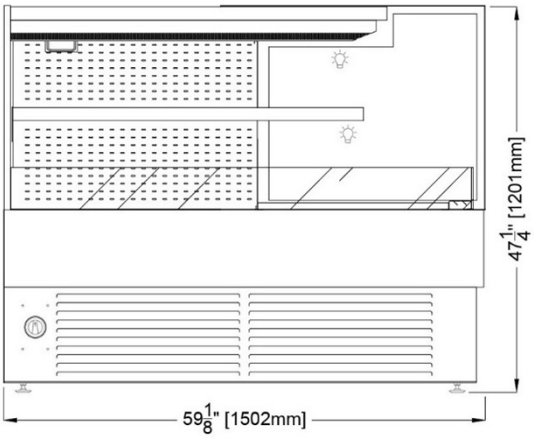

ELECTRICAL LEGEND	
oo	REFRIGERATION LINES
	DRAIN
	POWER

**Oscartek® reserves the right to change, modify, discontinue, or change any features, sizes, or capacity on any model without prior notice.*

OSCARTEK®
512 South Airport Blvd., South San Francisco, CA 94080
Tel: 855.885.2400 | 650.342.2400 | Fax: 650.342.7400
sales@oscartek.com | www.oscartek.com

Project Name: _____

Item #: _____ Quantity: _____

Discover the Art of Display...

MURO H13-1 MODELS: MURO H13-1-1000, MURO H13-1-1200, MURO H13-1-1500, MURO H13-1-1800, MURO H13-1-2000, MURO H13-1-2400, MURO H13-1-A90SQ, MURO H13-2-A90X, MURO H13-2-A90X
MURO H13-2 MODELS: MURO H13-2-1000, MURO H13-2-1200, MURO H13-2-1500, MURO H13-2-1800, MURO H13-2-2000, MURO H13-2-2400, MURO H13-2-A90SQ, MURO H13-2-A90X

STANDARD: MURO H13-1 & MURO H13-2 – SELF CONTAINED: BOTTOM MOUNT (BM)
SECTION VIEWS

MURO H13-1
SELF CONTAINED: BM

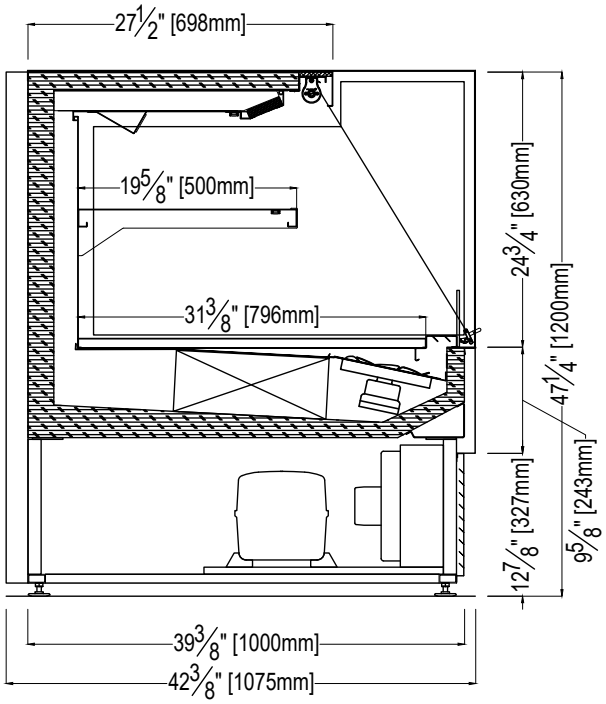

MURO H13-2
SELF CONTAINED: BM

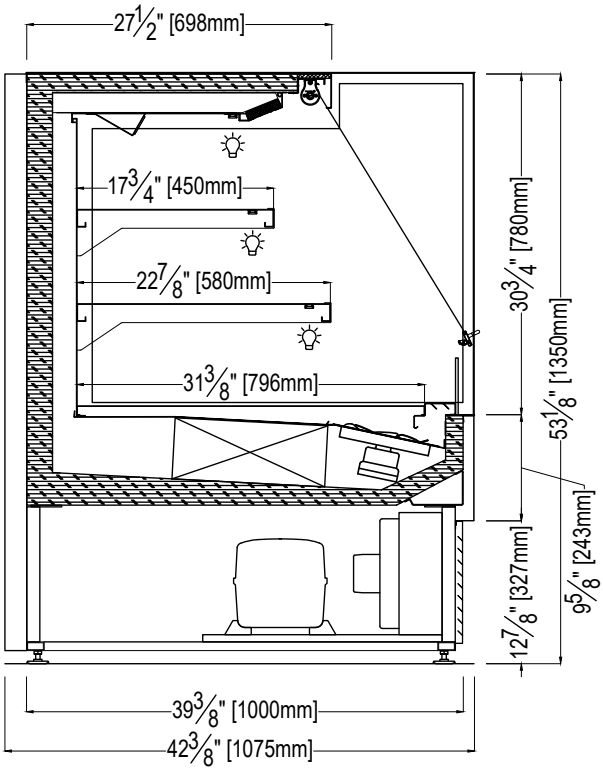

**Oscartek® reserves the right to change, modify, discontinue, or change any features, sizes, or capacity on any model without prior notice.*

OSCARTEK®
512 South Airport Blvd., South San Francisco, CA 94080
Tel: 855.885.2400 | 650.342.2400 | Fax: 650.342.7400
sales@oscartek.com | www.oscartek.com

12/2024

Project Name: _____
Item #: _____ Quantity: _____

Discover the Art of Display...

MURO H13-1 MODELS: MURO H13-1-1000, MURO H13-1-1200, MURO H13-1-1500, MURO H13-1-1800, MURO H13-1-2000, MURO H13-1-2400, MURO H13-1-A90SQ, MURO H13-2-A90X, MURO H13-2-A90X
MURO H13-2 MODELS: MURO H13-2-1000, MURO H13-2-1200, MURO H13-2-1500, MURO H13-2-1800, MURO H13-2-2000, MURO H13-2-2400, MURO H13-2-A90SQ, MURO H13-2-A90X

STANDARD: MURO H13-1 A90X – STANDARD REMOTE CONDENSING UNIT

PLAN VIEWS

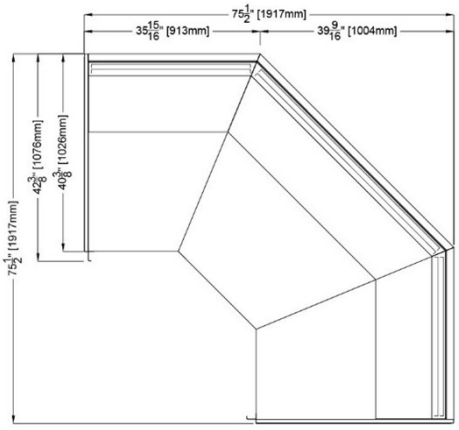

FRONT ELEVATIONS:
(OPERATOR SIDE)

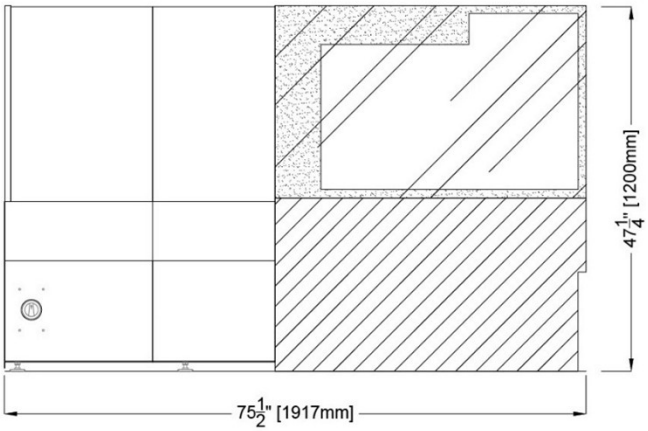

SECTION VIEWS

MURO H13-1 A90X

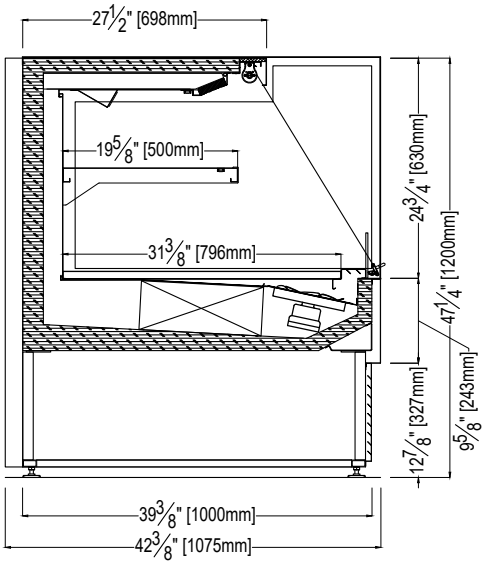

MURO H13-2 A90X

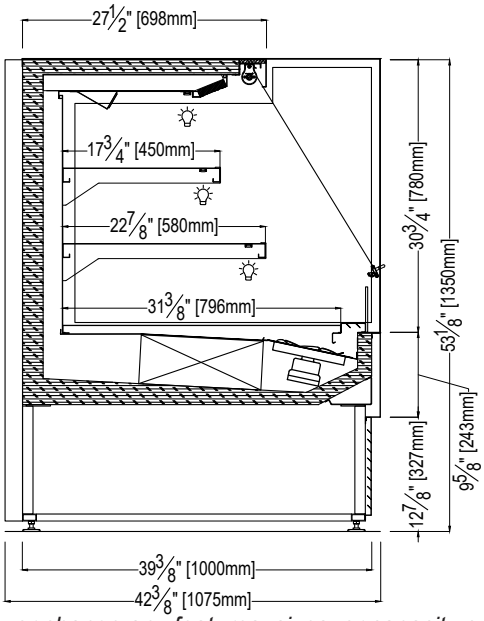

**Oscartek® reserves the right to change, modify, discontinue, or change any features, sizes, or capacity on any model without prior notice.*

OSCARTEK®
512 South Airport Blvd., South San Francisco, CA 94080
Tel: 855.885.2400 | 650.342.2400 | Fax: 650.342.7400
sales@oscartek.com | www.oscartek.com

12/2024

Project Name: _____

Item #: _____ Quantity: _____

Discover the Art of Display...

MURO H13-1 MODELS: MURO H13-1-1000, MURO H13-1-1200, MURO H13-1-1500, MURO H13-1-1800, MURO H13-1-2000, MURO H13-1-2400, MURO H13-1-A90SQ, MURO H13-2-A90X, MURO H13-2-A90X
MURO H13-2 MODELS: MURO H13-2-1000, MURO H13-2-1200, MURO H13-2-1500, MURO H13-2-1800, MURO H13-2-2000, MURO H13-2-2400, MURO H13-2-A90SQ, MURO H13-2-A90X

OPTIONALS:
MURO H13-1 & MURO H13-2 - SELF CONTAINED: BOTTOM MOUNT (BM) – ROLL DOWN SHUTTER WITH LOCK
SECTION VIEWS

MURO H13-1 SELF CONTAINED:
BM – NIGHT SHUTTER W/ LOCK

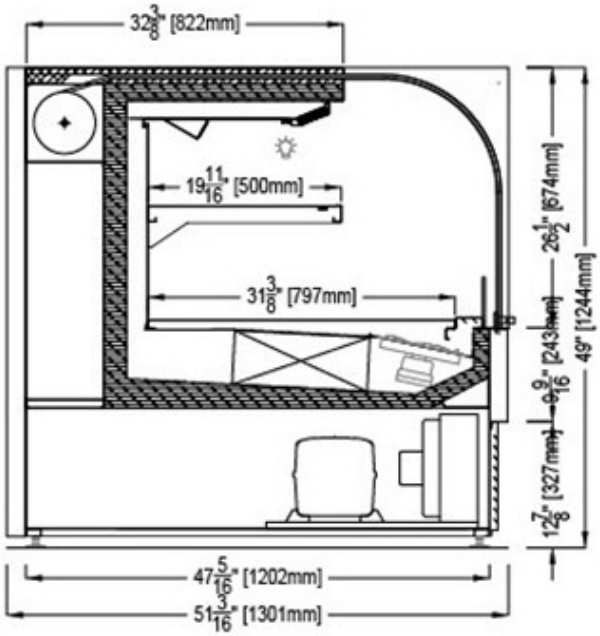

MURO H13-2 SELF CONTAINED:
BM – NIGHT SHUTTER W/ LOCK

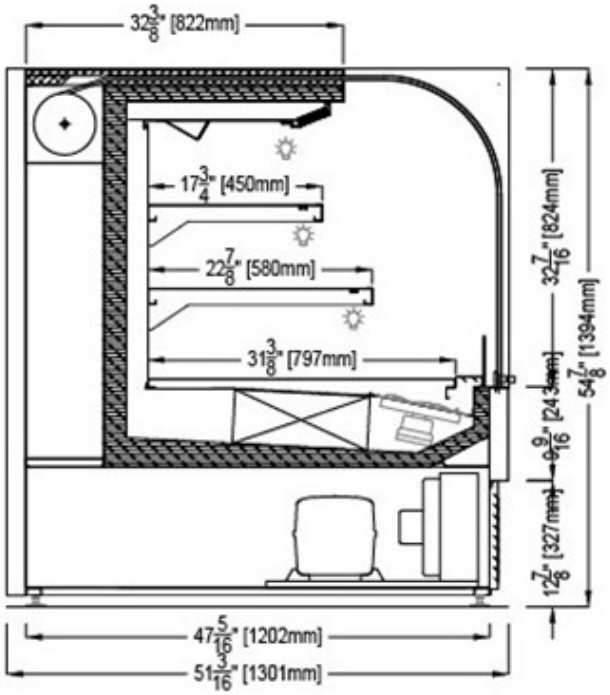

**Oscartek® reserves the right to change, modify, discontinue, or change any features, sizes, or capacity on any model without prior notice.*

OSCARTEK®
512 South Airport Blvd., South San Francisco, CA 94080
Tel: 855.885.2400 | 650.342.2400 | Fax: 650.342.7400
sales@oscartek.com | www.oscartek.com

12/2024

Project Name: _____
Item #: _____ Quantity: _____

Discover the Art of Display...

MURO H13-1 MODELS: MURO H13-1-1000, MURO H13-1-1200, MURO H13-1-1500, MURO H13-1-1800, MURO H13-1-2000, MURO H13-1-2400, MURO H13-1-A90SQ, MURO H13-2-A90X, MURO H13-2-A90X
MURO H13-2 MODELS: MURO H13-2-1000, MURO H13-2-1200, MURO H13-2-1500, MURO H13-2-1800, MURO H13-2-2000, MURO H13-2-2400, MURO H13-2-A90SQ, MURO H13-2-A90X

OPTIONALS: MURO H13-1 & MURO H13-2 – REMOTE CONDENSING UNIT
SECTION VIEWS

MURO H13-1
REMOTE CONDENSING UNIT

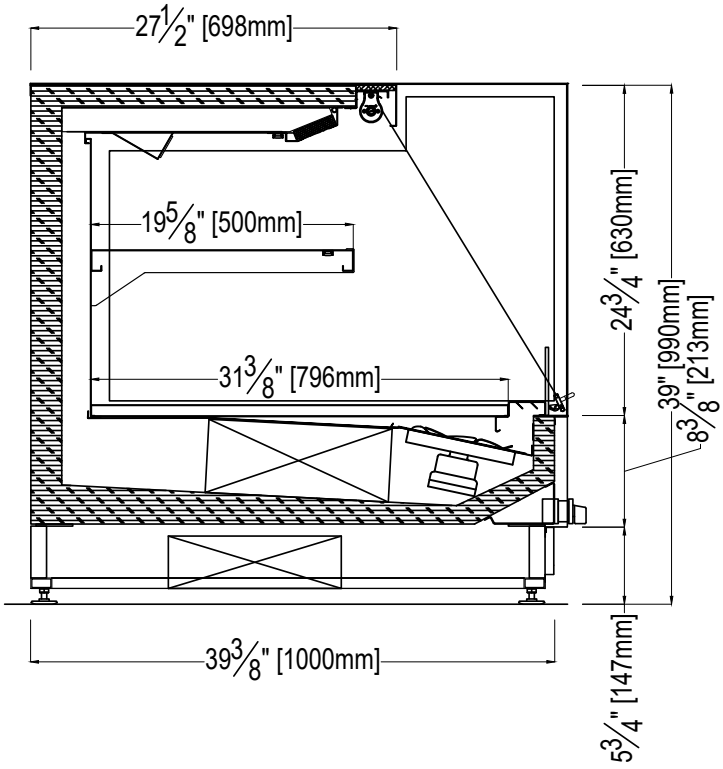

MURO H13-2
REMOTE CONDENSING UNIT

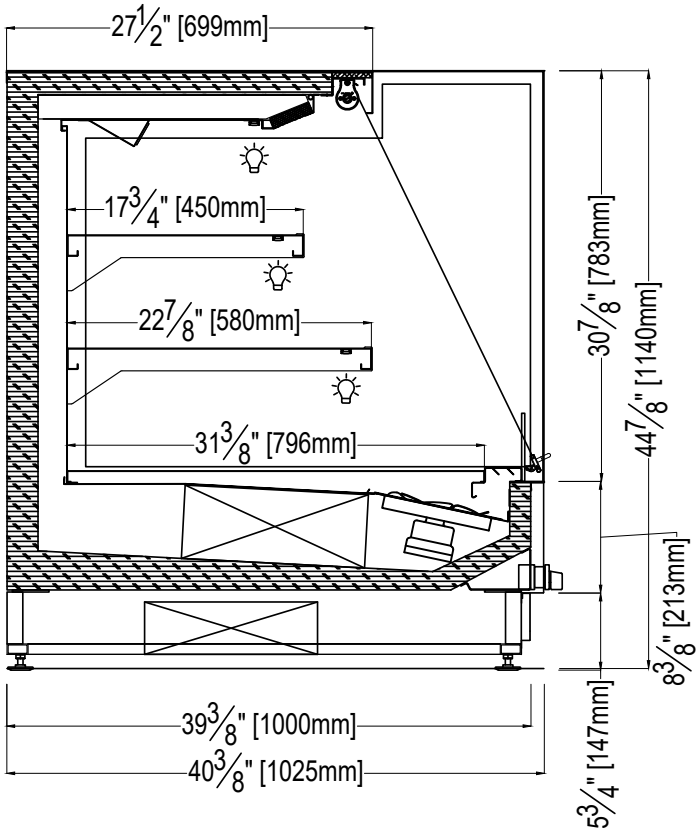

**Oscartek® reserves the right to change, modify, discontinue, or change any features, sizes, or capacity on any model without prior notice.*

OSCARTEK®
512 South Airport Blvd., South San Francisco, CA 94080
Tel: 855.885.2400 | 650.342.2400 | Fax: 650.342.7400
sales@oscartek.com | www.oscartek.com

Project Name: _____

Item #: _____ Quantity: _____

Discover the Art of Display...

MURO H13-1 MODELS: MURO H13-1-1000, MURO H13-1-1200, MURO H13-1-1500, MURO H13-1-1800, MURO H13-1-2000, MURO H13-1-2400, MURO H13-1-A90SQ, MURO H13-2-A90X, MURO H13-2-A90X
MURO H13-2 MODELS: MURO H13-2-1000, MURO H13-2-1200, MURO H13-2-1500, MURO H13-2-1800, MURO H13-2-2000, MURO H13-2-2400, MURO H13-2-A90SQ, MURO H13-2-A90X

OPTIONALS:
MURO H13-1 & MURO H13-2 – REMOTE CONDENSING UNIT WITH BACK SHELVING
SECTION VIEWS

MURO H13-1: REMOTE CONDENSING UNIT W/ BACK SHELVING

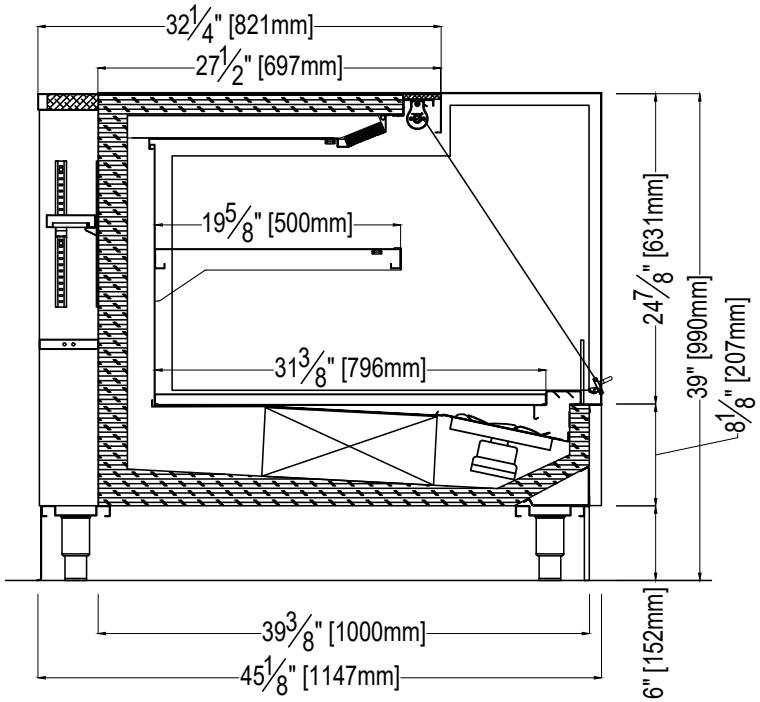

MURO H13-2: REMOTE CONDENSING UNIT W/ BACK SHELVING

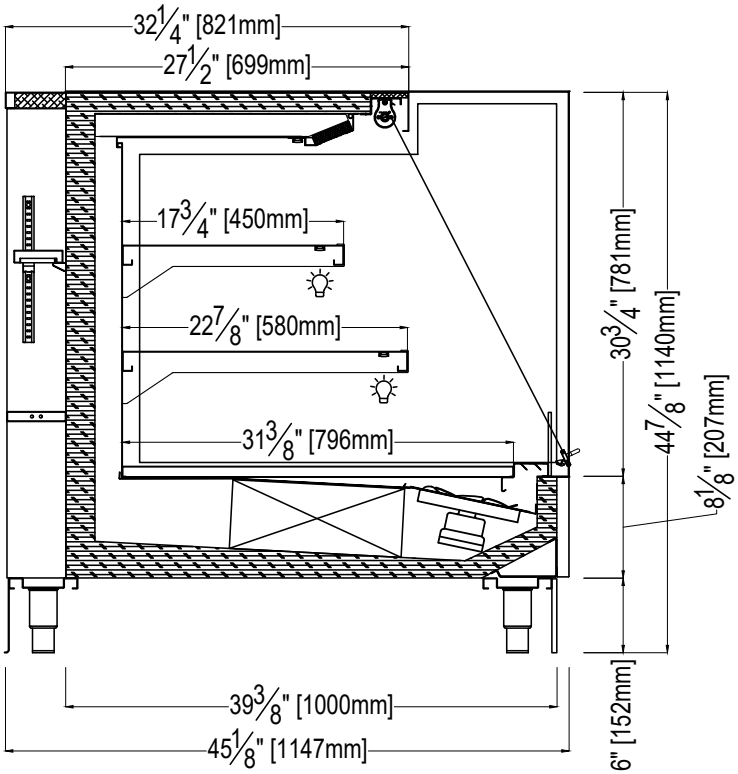

**Oscartek® reserves the right to change, modify, discontinue, or change any features, sizes, or capacity on any model without prior notice.*

OSCARTEK®
512 South Airport Blvd., South San Francisco, CA 94080
Tel: 855.885.2400 | 650.342.2400 | Fax: 650.342.7400
sales@oscartek.com | www.oscartek.com

Project Name: _____

Item #: _____ Quantity: _____

Discover the Art of Display...

MURO H13-1 MODELS: MURO H13-1-1000, MURO H13-1-1200, MURO H13-1-1500, MURO H13-1-1800, MURO H13-1-2000, MURO H13-1-2400, MURO H13-1-A90SQ, MURO H13-2-A90X, MURO H13-2-A90X
MURO H13-2 MODELS: MURO H13-2-1000, MURO H13-2-1200, MURO H13-2-1500, MURO H13-2-1800, MURO H13-2-2000, MURO H13-2-2400, MURO H13-2-A90SQ, MURO H13-2-A90X

OPTIONALS:
MURO H13-1 & MURO H13-2 – SELF CONTAINED REAR MOUNT (RM) WITH BACK SHELVING
SECTION VIEWS

MURO H13-1: SELF CONTAINED RM W/ BACK SHELVING

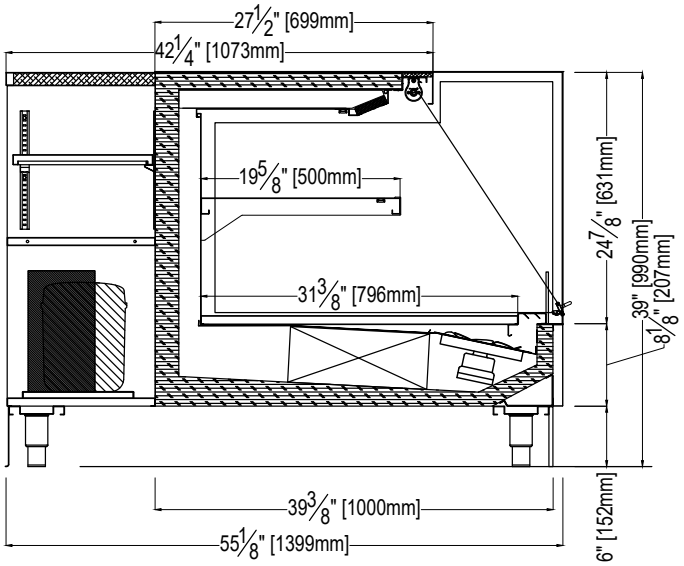

MURO H13-2: SELF CONTAINED RM W/ BACK SHELVING

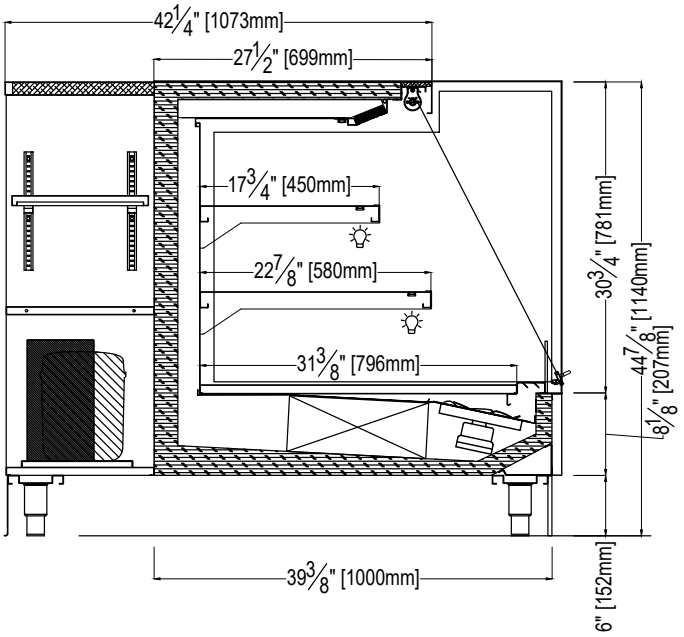

**Oscartek® reserves the right to change, modify, discontinue, or change any features, sizes, or capacity on any model without prior notice.*

OSCARTEK®
512 South Airport Blvd., South San Francisco, CA 94080
Tel: 855.885.2400 | 650.342.2400 | Fax: 650.342.7400
sales@oscartek.com | www.oscartek.com

12/2024

Project Name: _____

Item #: _____ Quantity: _____

Discover the Art of Display...

MURO H13-1 MODELS: MURO H13-1-1000, MURO H13-1-1200, MURO H13-1-1500, MURO H13-1-1800, MURO H13-1-2000, MURO H13-1-2400, MURO H13-1-A90SQ, MURO H13-2-A90X, MURO H13-2-A90X
MURO H13-2 MODELS: MURO H13-2-1000, MURO H13-2-1200, MURO H13-2-1500, MURO H13-2-1800, MURO H13-2-2000, MURO H13-2-2400, MURO H13-2-A90SQ, MURO H13-2-A90X

MURO H13-1 SELF SERVE AIR SCREEN REFRIGERATION					
TECHNICAL FEATURES		MODELS			
		MURO H13-1-1000 (MUROH131391S)	MURO H13-1-1200 (MUROH13471S)	MURO H13-1-1500 (MUROH131591S)	MURO H13-1-1800 (MUROH13711S)
External Dimensions (L-D-H) Inches-MM	Inches MM	* 39 3/8" - 42 3/8" - 47 1/4" *1002 - 1076 - 1201	*47 1/4" - 42 3/8" - 47 1/4" *1202 - 1076 - 1201	*59 1/8" - 42 3/8" - 47 1/4" *1502 - 1076 - 1201	*70 7/8" - 42 3/8" - 47 1/4" *1802 - 1076 - 1201
Crated Dimensions (L-D-H) Inches-MM	Inches MM	46" - 50" - 54" 1168 - 1270 - 1371	55" - 50" - 54" 1397 - 1270 - 1371	66" - 50" - 54" 1676 - 1270 - 1371	77" -50" - 54" 1955 - 1270 - 1371
Operating Temperature	°F	40°F	40°F	40°F	40°F
BTU's @ +14°F Evap Temperature	**BTU'S	**5800	**7200	**7800	**8300
Electric Supply	(V/Ph/Hz)	208-220/1/60	208-220/1/60	208-220/1/60	208-220/1/60
Power Consumption	(W/A)	1350/6.5	1450/7.5	1550/7.9	1650/8.2
Climate Class	°F/H.R.	75°F-55%RH	75°F-55%RH	75°F-55%RH	75°F-55%RH
Refrigerant Gas	Type	R404A / R452A	R404A / R452A	R404A / R452A	R404A / R452A
Pipe Size (Inches)	Suction, Liquid	5/8" Suction, 5/16" Liquid	5/8" Suction, 5/16" Liquid	5/8" Suction, 5/16" Liquid	5/8" Suction, 5/16" Liquid
Net Weights	Lb	285	350	420	460
Crated Weights	Lb	365	430	510	540
*DIMENSIONS ARE WITH POLISHED S/S SIDES					
**ACTUAL BTU'S WILL VARY. YOU MUST RELY ON PRODUCTION DRAWINGS SUBMITTED PER EACH PROJECT.					

MURO H13-1 SELF SERVE AIR SCREEN REFRIGERATION					
TECHNICAL FEATURES		MODELS			
		MURO H13-1-2000 (MUROH13791S)	MURO H13-1-2400 (MUROH13941S)	MURO H13-1-A90SQ (MUROH1390SQ1S)	MURO H13-1-A90X
External Dimensions (L-D-H) Inches-MM	Inches MM	*78 3/4" - 42 3/8" - 47 1/4" *2002 - 1076 - 1201	*94 1/2 - 42 3/8" - 47 1/4" *2402 - 1076 - 1201	*59 1/8" - 42 3/8" - 47 1/4" *1502 - 1076 - 1201	*75 1/12" - 42 3/8" - 47 1/4" *1917 - 1076 - 1201
Crated Dimensions (L-D-H) Inches-MM	Inches MM	84" - 50" - 54" 2133 - 1270 - 1371	101" - 50" - 54" 2565 - 1270 - 1371	66" - 50" - 54" 1676 - 1270 - 1371	84" - 84" - 54" 2134 - 2134 - 1371
Operating Temperature	°F	40°F	40°F	40°F	40°F
BTU's @ +14°F Evap Temperature	**BTU'S	**8900	**10250	**8900	**12500 @ +10°F
Electric Supply	(V/Ph/Hz)	208-220/1/60	208-220/1/60	208-220/1/60	208-220/1/60
Power Consumption	(W/A)	1850/9.0	2200/12.0	1850/9.0	2350/13.5
Climate Class	°F /H.R.	75°F-55%RH	75°F-55%RH	75°F-55%RH	75°F-55%RH
Refrigerant Gas	Type	R404A / R452A	R404A / R452A	R404A / R452A	R404A / R452A
Pipe Size (Inches)	Suction, Liquid	5/8" Suction, 5/16" Liquid	5/8" Suction, 5/16" Liquid	5/8" Suction, 5/16" Liquid	5/8" Suction, 5/16" Liquid
Net Weights	Lb	530	660	575	660
Crated Weights	Lb	610	740	655	740
*DIMENSIONS ARE WITH POLISHED S/S SIDES					
**ACTUAL BTU'S WILL VARY. YOU MUST RELY ON PRODUCTION DRAWINGS SUBMITTED PER EACH PROJECT.					

**Oscartek® reserves the right to change, modify, discontinue, or change any features, sizes, or capacity on any model without prior notice.*

OSCARTEK®
512 South Airport Blvd., South San Francisco, CA 94080
Tel: 855.885.2400 | 650.342.2400 | Fax: 650.342.7400
sales@oscartek.com | www.oscartek.com

12/2024

Project Name: _____

Item #: _____ Quantity: _____

Discover the Art of Display...

MURO H13-1 MODELS: MURO H13-1-1000, MURO H13-1-1200, MURO H13-1-1500, MURO H13-1-1800, MURO H13-1-2000, MURO H13-1-2400, MURO H13-1-A90SQ, MURO H13-2-A90X, MURO H13-2-A90X
MURO H13-2 MODELS: MURO H13-2-1000, MURO H13-2-1200, MURO H13-2-1500, MURO H13-2-1800, MURO H13-2-2000, MURO H13-2-2400, MURO H13-2-A90SQ, MURO H13-2-A90X

MURO H13-2 SELF SERVE AIR SCREEN REFRIGERATION					
TECHNICAL FEATURES		MODELS			
		MURO H13-2-1000 (MUROH13392S)	MURO H13-2-1200 (MUROH13472S)	MURO H13-2-1500 (MUROH13592S)	MURO H13-2-1800 (MUROH13712S)
External Dimensions (L-D-H) Inches-MM	Inches MM	* 39 1/2" - 42 3/8" - 53 3/16" *1003 - 1076 - 1351	*47 3/8" - 42 3/8" - 53 3/16" *1203 - 1076 - 1351	*59 3/16" - 42 3/8" - 53 3/16" *1503 - 1076 - 1351	*71" - 42 3/8" - 53 3/16" *1803 - 1076 - 1351
Crated Dimensions (L-D-H) Inches-MM	Inches MM	46" - 50" - 60" 1168 - 1270 - 1524	55" - 50" - 60" 1397 - 1270 - 1524	66" - 50" - 60" 1676 - 1270 - 1524	77" - 50" - 60" 1955 - 1270 - 1524
Operating Temperature	°F	40°F	40°F	40°F	40°F
BTU's @ +14°F Evap Temperature	**BTU'S	**6200	**7600	**8200	**8875
Electric Supply	(V/Ph/Hz)	208-220/1/60	208-220/1/60	208-220/1/60	208-220/1/60
Power Consumption	(W/A)	1450/7.5	1550/7.9	1650/8.2	1850/9.0
Climate Class	°F /H.R.	75°F-55%RH	75°F-55%RH	75°F-55%RH	75°F-55%RH
Refrigerant Gas	Type	R404A / R452A	R404A / R452A	R404A / R452A	R404A / R452A
Pipe Size (Inches)	Suction, Liquid	5/8" Suction, 5/16" Liquid	5/8" Suction, 5/16" Liquid	5/8" Suction, 5/16" Liquid	5/8" Suction, 5/16" Liquid
Net Weights	Lb	330	395	460	530
Crated Weights	Lb	410	475	540	610
*DIMENSIONS ARE WITH POLISHED S/S SIDES					
**ACTUAL BTU'S WILL VARY. YOU MUST RELY ON PRODUCTION DRAWINGS SUBMITTED PER EACH PROJECT.					

MURO H13-2 SELF SERVE AIR SCREEN REFRIGERATION					
TECHNICAL FEATURES		MODELS			
		MURO H13-2-2000 (MUROH13792S)	MURO H13-2-2400 (MUROH13942S)	MURO H13-2-A90SQ (MUROH1390SQ2S)	MURO H13-2-A90X
External Dimensions (L-D-H) Inches-MM	Inches MM	*78 7/8" - 42 3/8" - 53 3/16" *2004 - 1076 - 1351	*94 5/8 - 42 3/8" - 53 3/16" *2404 - 1076 - 1351	*59 1/8" - 42 3/8" - 53 3/16" *1502 - 1076 - 1351	*75 1/2" - 42 3/8" - 53 3/16" *1917 - 1076 - 1351
Crated Dimensions (L-D-H) Inches-MM	Inches MM	84" - 50" - 60" 2133 - 1270 - 1524	101" - 50" - 60" 2565 - 1270 - 1524	66" - 50" - 60" 1676 - 1270 - 1524	84" - 84" - 60" 2134 - 2134 - 1524
Operating Temperature	°F	40°F	40°F	40°F	40°F
BTU's @ +14°F Evap Temperature	**BTU'S	**9600	**11000	**9600	**13200 @ +10°F
Electric Supply	(V/Ph/Hz)	208-220/1/60	208-220/1/60	208-220/1/60	208-220/1/60
Power Consumption	(W/A)	2000/10.5	2500/14.5	2000/10.5	2700/16.5
Climate Class	°F /H.R.	75°F-55%RH	75°F-55%RH	75°F-55%RH	75°F-55%RH
Refrigerant Gas	Type	R404A / R452A	R404A / R452A	R404A / R452A	R404A / R452A
Pipe Size (Inches)	Suction, Liquid	5/8" Suction, 5/16" Liquid	5/8" Suction, 5/16" Liquid	5/8" Suction, 5/16" Liquid	5/8" Suction, 5/16" Liquid
Net Weights	Lb	595	795	620	795
Crated Weights	Lb	675	875	700	875
*DIMENSIONS ARE WITH POLISHED S/S SIDES					
**ACTUAL BTU'S WILL VARY. YOU MUST RELY ON PRODUCTION DRAWINGS SUBMITTED PER EACH PROJECT.					

**Oscartek® reserves the right to change, modify, discontinue, or change any features, sizes, or capacity on any model without prior notice.*

OSCARTEK®
512 South Airport Blvd., South San Francisco, CA 94080
Tel: 855.885.2400 | 650.342.2400 | Fax: 650.342.7400
sales@oscartek.com | www.oscartek.com