# HKN-GXE47F2 - 54" Double Solid Doors

HURAKAN

*Reach-In Freezers*

Item #: HKN-GXE47F2/US Project: _____

Qty: _____ Date: _____ Approval: _____

## Technical Data

| | |
|---|---|
| Width | 54 Inches |
| Depth | 32 1/4 Inches |
| Height | 82 1/2 Inches |
| Capacity | 47 cu. ft |
| Power Cord Length | 98 3/8 Inches |
| Interior Width | 49 3/8 Inches |
| Right Door Opening Width | 22 5/8 Inches |
| Interior Depth | 27 1/8 Inches |
| Interior Height | 51 5/8 Inches |

## Features

- Stainless steel interior and exterior, aluminum back.
- Option of bright white aluminum interior available
- Electronic control makes it easy to adjust temperature set point and defrost frequency.
- Refrigeration system keeps food at safe temperatures between -8F and 0F .
- Preinstalled heavy-duty casters with brakes
- Self-Closing doors with 90 degree stay-open feature Locks and keys included
- Removable installation board makes it easy to access condenser coil for cleaning and service.
- Option of different handles & control panels available
- Adjustable heavy-duty PVC coated shelves

## Certifications

5-15P Intertek **ETL, US** Intertek **ETL Sanitation**

**www.equip.me**

©2024 Hurakan

## Technical Data

| | |
|---|---|
| Amps | 10.7 Amps |
| Hertz | 60 Hertz |
| Phase | 1 Phase |
| Voltage | 110 Volts |
| Access Type | Doors |
| Casters | With Casters |
| Color | Silver |
| Compressor Location | Bottom Mounted |
| Construction | Stainless steel interior and exterior, aluminum back |
| Door Style | Swing |
| Door Type | Solid |
| Dutch Half Doors | Without Dutch Half Doors |
| Features | no |
| Horsepower | 1 |
| Individual Shelf Capacity | 88 lb. |
| Installation Type | Freestanding |
| Number of Doors | 2 Doors |
| Number of Shelves | 6 Shelves |
| Plug Type | NEMA 5-20P |
| Refrigerant Capacity | 4.59 oz |
| Refrigerant Type | R-290 |
| Sections | 1 Section |
| Temperature Range | -8 -0 Degrees F |



©2024 Hurakan

## Plan View

FRONT VIEW

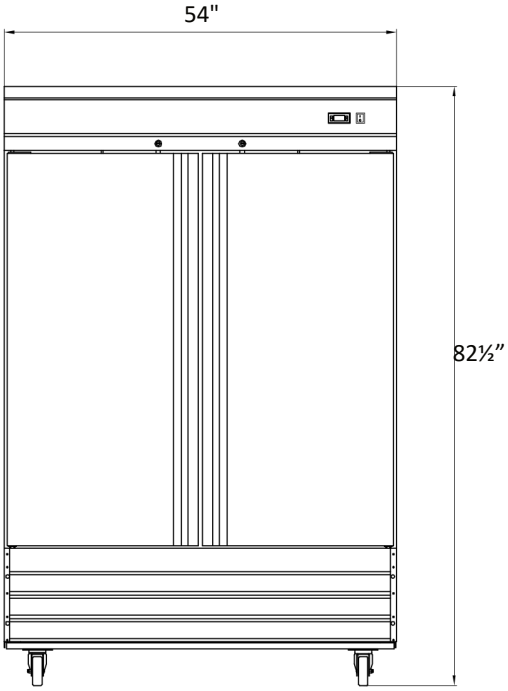


SIDE VIEW

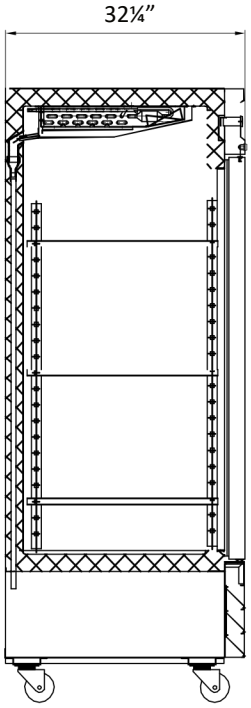


TOP VIEW

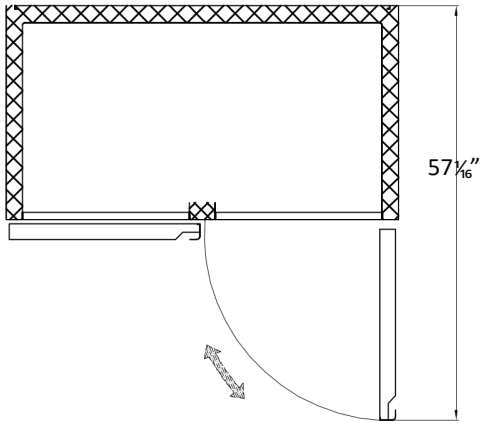


## Notes & Details

Two-Door Reach-In Freezer. This Reach-In Freezer features a stainless steel interior and exterior, with an aluminum back. It includes self-closing doors with a 90-degree stay-open feature for convenience. Additionally, there's an option for a bright white aluminum interior. Locks and keys are included for security purposes.

The electronic control system simplifies operation, allowing for easy adjustment of temperature set points and defrost frequency. It also facilitates access to the condenser coil for cleaning and service through a removable installation board.

The refrigeration system maintains food at safe temperatures between -8°F and 0°F. Preinstalled heavy-duty casters with brakes ensure mobility and stability. Furthermore, the unit comes with adjustable heavy-duty PVC-coated shelves. Optional handles and control panels are available for customization.

Dimensions: 54" x 32 1/4" x 82 1/2"
Capacity 47 cu. ft.

**www.equip.me**

©2024 Hurakan