SPEC SHEET

14 In. Wooden Double Bin Bread Drawer in Light Brown

Model: KM-BDW-14LN

FEATURES

- **Compact Double Drawer Bread Storage (13.75" L x 13" W x 7.25" H):** Space-efficient 0.5 cu. ft. design ideal for countertops in cafés, bakeries, and retail environments.
- **Dual Drawer Design for Organized Storage:** Two separate pull-out compartments make it easy to sort and access different baked goods.
- **Wood and Tempered Glass Construction:** Durable eucalyptus wood frame paired with clear tempered glass panels for a clean, upscale presentation.
- **Clear Acrylic Drawers for Easy Visibility:** Transparent fronts allow quick product identification while maintaining a clean, modern look.
- **Dust-Resistant Enclosed Design:** Helps keep contents fresh and protected in commercial settings.
- **Easy-Access Pull-Out Drawers:** Simple pull-out design allows convenient access to stored items.
- **Easy-Clean Materials for Low Maintenance:** Smooth wood and acrylic surfaces simplify cleaning.
- **Stable Base with Non-Slip Silicone Feet:** Keeps the unit securely positioned during use.

Technical Specs

Dimensions & Weight

Height	7.25 in.
Length	13.75 in.
Width	13 in.
Weight	14.55 lbs.
Interior Heigh	6.29 in.
Interior Width	12.59 in.
Interior Depth	12.67 in.

Features & Materials

Material	Wood and Glass
Wood Type	Eucalyptus Multi-Layer Plywood
Glass Type	Tempered
Color Finish	Light Brown
Number of Doors	2
Door Style	Drawer
Individual Shelf Capacity	22 lbs.
Shelf Material Type	Acrylic
Legs Adjustable	No
Cleaning Type	Cloth
Assembly Required	False

Plan View

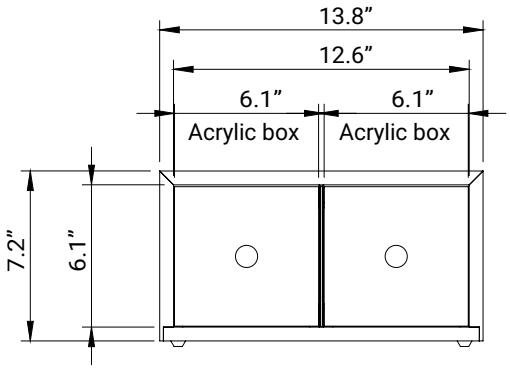

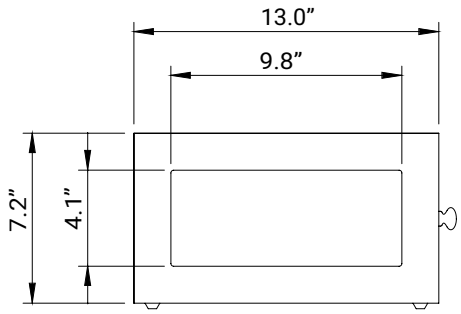

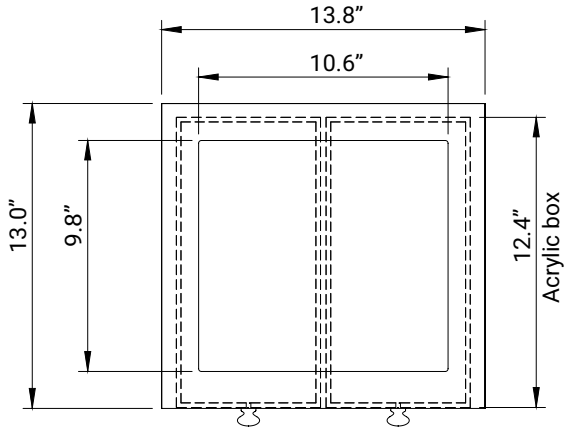

718-576-6342
info@koolmore.com