SPEC SHEET

25 In. 3-Tier Paneled Rustic Style Wooden Bakery Display Case with Swing Doors in Beige

Model: KM-BDW-25ES

FEATURES

- **Compact Bakery Display Case (25" L x 17" W x 23" H):** 3.46 cu. ft. capacity in a space-efficient design, ideal for countertops in cafés, bakeries, and retail settings.
- **Rustic Artisan Design:** Natural wood finish with exposed metal hinges and classic framing details adds a handcrafted, vintage-inspired look.
- **Wood and Tempered Glass Construction:** Durable wood frame paired with clear tempered glass panels for a warm, modern presentation.
- **Dual Swing Glass Doors:** Front-opening doors provide easy access for serving and restocking while maintaining an enclosed display.
- **Multi-Tier Display Shelving:** Includes 2 tempered glass shelves (22 lbs. capacity each) for organized, layered product presentation.
- **Clear Glass Panels for Full Visibility:** Maximizes product visibility from multiple angles to enhance merchandising appeal.
- **Enclosed, Dust-Resistant Design:** Helps keep baked goods protected while maintaining a clean and professional look.
- **Compact Countertop Footprint:** Ideal for smaller spaces while still offering generous display capacity.
- **Durable Commercial Build:** Sturdy construction designed for daily use in foodservice environments.

Technical Specs

Dimensions & Weight

Height	23 in.
Length	25 in.
Width	17 in.
Weight	55.56 lbs.
Interior Heigh	21.12 in.
Interior Width	23.11 in.
Interior Depth	15 in.

Features & Materials

Number of Tiers	3
Number of Shelves	2
Material	Wood and Glass
Wood Type	Ash Wood/Eucalyptus Multi-Layer Plywood
Glass Type	Tempered
Color Finish	Beige
Number of Doors	2
Door Style	Swing
Individual Shelf Capacity	22 lbs.
Shelf Material Type	Tempered Glass
Legs Adjustable	No
Cleaning Type	Cloth
Assembly Required	False

Plan View

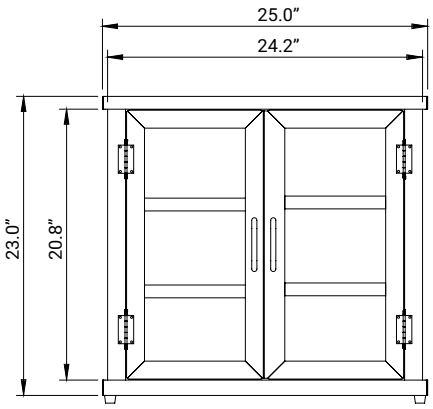

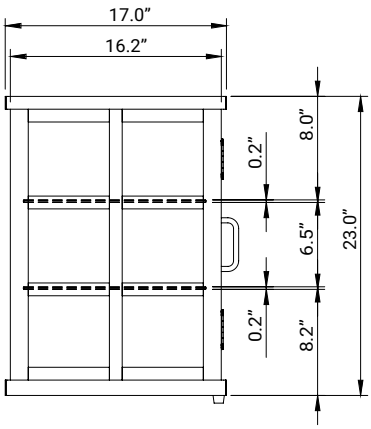

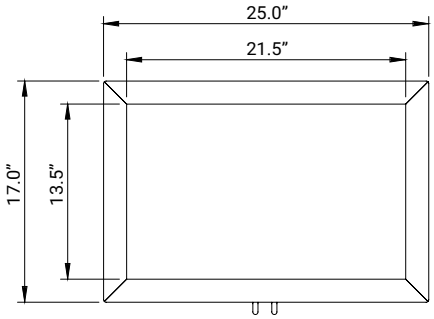

718-576-6342
info@koolmore.com