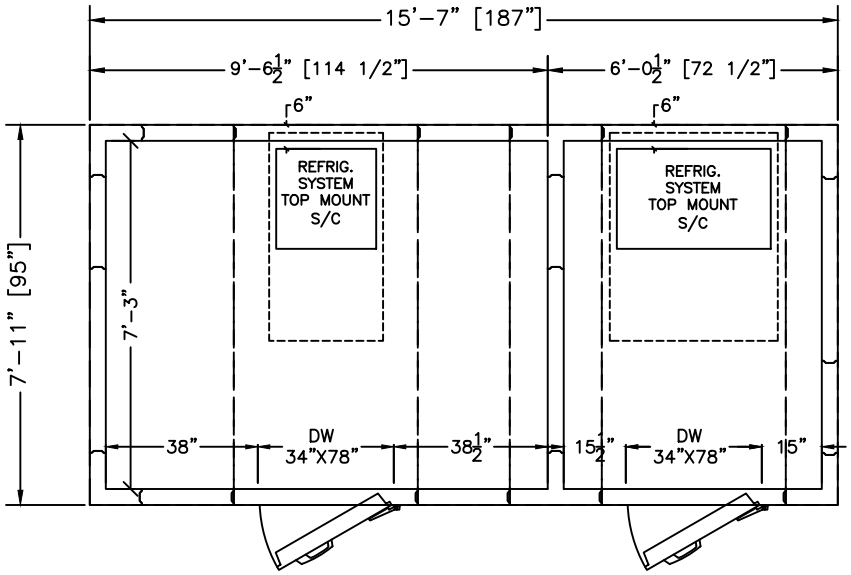

COOLER
(WITH FLOOR PANELS)

FREEZER
(WITH FLOOR PANELS)

RIGHT HAND DOOR SHOWN

SELECT HINGE SIDE FOR DOORS

COOLER	FREEZER
☐ RIGHT HAND	☐ RIGHT HAND
☐ LEFT HAND	☐ LEFT HAND

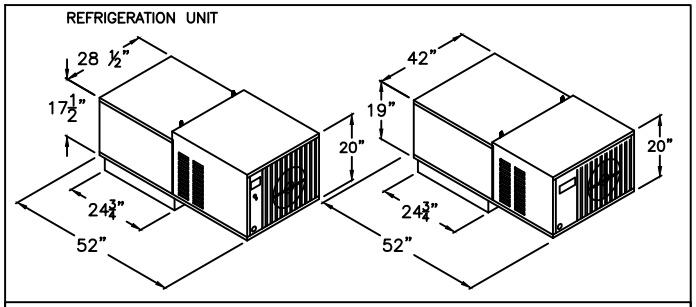

IMPORTANT: ALLOW 2 FEET CLEARANCE ABOVE UNIT
DO NOT STORE OBJECTS IN FRONT OR THE SIDES OF THE UNIT.
FOLLOW OEM's CLEARANCE GUIDELINES TO ENSURE PROPER OPERATION

REFRIGERATION DESIGN SPECIFICATIONS	
WALK-IN AMBIENT TEMP:	90°F
CONDENSER AMBIENT TEMP:	95°F
PULLDOWN:	24 Hours
HOLDING TEMP:	35°F (Cooler), -10°F (Freezer)
OPENINGS PER HOUR:	2

PRODUCT SPECIFICATIONS		
MODEL:	BL168-COMBO-CF-SC	
WALK-IN SPECIFICATIONS		
INTERIOR/EXTERIOR FINISH	26 GAUGE MILL EMBOSSED ACRYLUME OR 26 GAUGE STUCCO EMBOSSED GALVANIZED STEEL	
ELECTRICAL (VOLTS/Hz/PH)	115/60/1	
MAX AMP.	0.8 COOLER & 2.2 FREEZER	
REF. SYSTEM SPECIFICATIONS	COOLER	FREEZER
ELECTRICAL (VOLTS/Hz/PH)	230/60/1	230/60/1
AMPS	8	10.4
WEIGHT (LBS)	215	225
MATCHING NEMA RECEPTACLE	6-15R	6-20R
WALK-IN AND REFRIGERATION FREIGHT		
TOTAL SHIPPING WEIGHT (LBS)	2900	
MAXIMUM PALLET SIZE	48"W X 96"L X 102"H	
NUMBERS OF PALLETS	2	

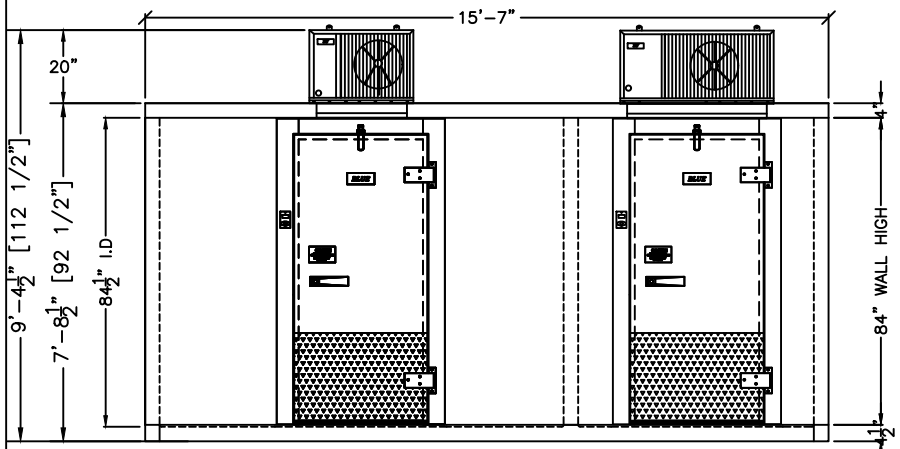

1 ELEVATION
SCALE: 1/4"=1'-0"

MODEL: BL168-COMBO-CF-SC

COOLER/FREEZER WITH FLOOR

COOLER 35°F / FREEZER -10°F

SELF-CONTAINED SYSTEM

CUSTOMER APPROVAL

DATE: _____

SIGNATURE: _____

CONFIDENTIAL

THE DRAWINGS, TECHNICAL DATA, AND ALL OTHER INFORMATION SET FORTH IN THIS DOCUMENT COMPRISE TRADE SECRETS AND CONFIDENTIAL INFORMATION THAT IS THE EXCLUSIVE PROPERTY OF ARCTIC INDUSTRIES, LLC.

USE OF SUCH INFORMATION IS LIMITED TO THE PURPOSE FOR WHICH IT WAS PROVIDED AND NO RECIPIENT IS PERMITTED TO USE, COPY, OR DISCLOSE SUCH INFORMATION EXCEPT AS EXPRESSLY AUTHORIZED BY ARCTIC INDUSTRIES, LLC.

Arctic®
WALK-IN COOLERS AND FREEZERS
MIAMI, FLORIDA
Phone: (305) 883-5581
LOS ANGELES, CALIFORNIA
Phone: (626) 508-0920

Intertek CONFORMS TO UL STD 471
Intertek CONFORMS TO NSF STD 7
EISA