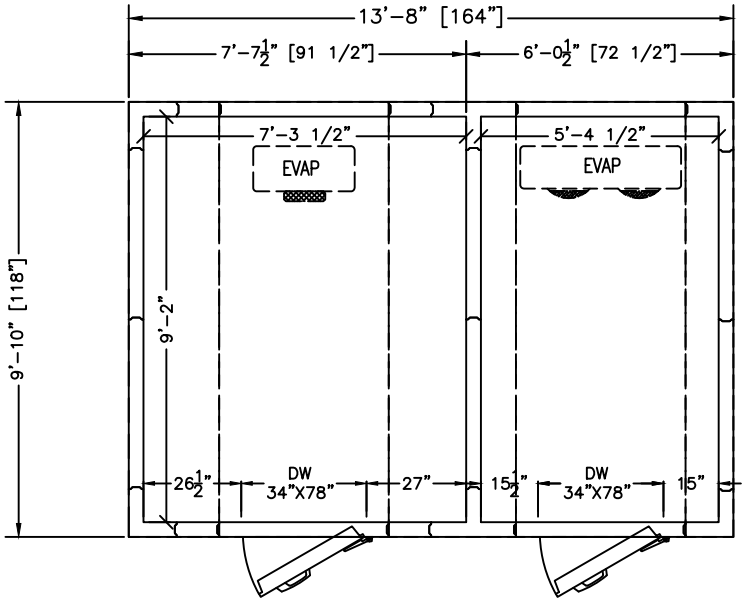

COOLER
(WITH FLOOR PANELS)

FREEZER
(WITH FLOOR PANELS)

RIGHT HAND DOOR SHOWN

SELECT HINGE SIDE FOR DOORS

COOLER	FREEZER
☐ RIGHT HAND	☐ RIGHT HAND
☐ LEFT HAND	☐ LEFT HAND

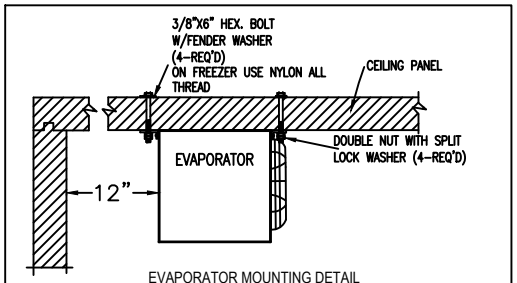

EVAPORATOR MOUNTING DETAIL
(MOUNTING HARDWARE AND REFRIGERATION LINES PROVIDED BY OTHERS)

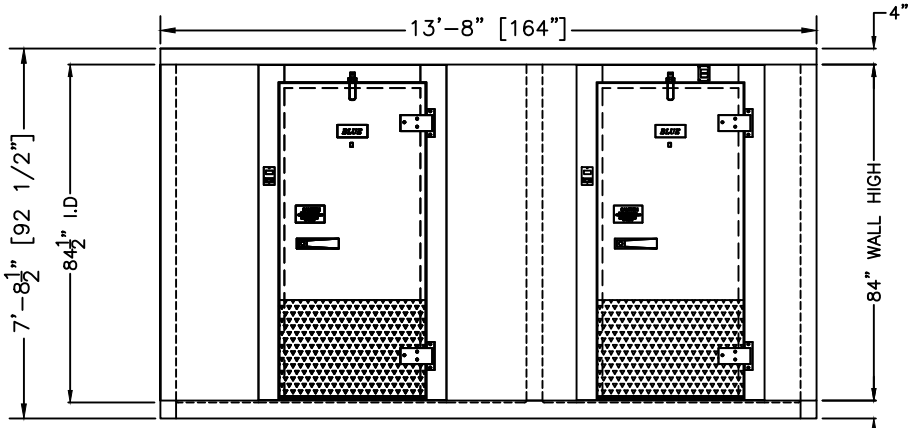

1 ELEVATION
SCALE: 1/4"=1'-0"

REFRIGERATION DESIGN SPECIFICATIONS	
WALK-IN AMBIENT TEMP:	90°F
CONDENSER AMBIENT TEMP:	95°F
PULLDOWN:	24 Hours
HOLDING TEMP:	35°F (Cooler), -10°F (Freezer)
OPENINGS PER HOUR:	2
REFRIGERATION LINE MAX LENGHT:	40FT (PROVIDED BY OTHERS)

PRODUCT SPECIFICATIONS	
MODEL:	BL1410-COMBO-CF-R

WALK-IN SPECIFICATIONS	
INTERIOR/EXTERIOR FINISH	26 GAUGE MILL EMBOSSED ACRYLUME OR 26 GAUGE STUCCO EMBOSSED GALVANIZED STEEL
ELECTRICAL (VOLTS/Hz/PH)	115/60/1
MAX AMP.	0.8 COOLER & 2.2 FREEZER

EVAPORATOR SPECIFICATIONS	COOLER	FREEZER
ELECTRICAL (VOLTS/Hz/PH)	115/60/1	230/60/1
AMPS	20	20
WEIGHT (LBS)	47	52

CONDENSING UNIT SPECIFICATIONS	COOLER	FREEZER
ELECTRICAL (VOLTS/Hz/PH)	208-230/60/1	208-230/60/1
AMPS	15	25
WEIGHT (LBS)	195	230

FREIGHT INFORMATION (REF. INCLUDED)	
TOTAL SHIPPING WEIGHT (LBS)	3070
MAXIMUM PALLET SIZE	48"W X 96"L X 102"H
NUMBERS OF PALLETS	2

MODEL: BL1410-COMBO-CF-R

INDOOR-WITH FLOOR

COOLER 35°F / FREEZER -10°F

REMOTE PRE-ASSEMBLED REFRIGERATION

CUSTOMER APPROVAL

DATE: _____

SIGNATURE: _____

CONFIDENTIAL

THE DRAWINGS, TECHNICAL DATA, AND ALL OTHER INFORMATION SET FORTH IN THIS DOCUMENT COMPRISE TRADE SECRETS AND CONFIDENTIAL INFORMATION THAT IS THE EXCLUSIVE PROPERTY OF ARCTIC INDUSTRIES, LLC.

USE OF SUCH INFORMATION IS LIMITED TO THE PURPOSE FOR WHICH IT WAS PROVIDED AND NO RECIPIENT IS PERMITTED TO USE, COPY, OR DISCLOSE SUCH INFORMATION EXCEPT AS EXPRESSLY AUTHORIZED BY ARCTIC INDUSTRIES, LLC.

Arctic®
WALK-IN COOLERS AND FREEZERS
MIAMI, FLORIDA
PHONE: (305) 883-5581
LOS ANGELES, CALIFORNIA
PHONE: (626) 508-0920
www.arcticwalkins.com

Intertek CONFORMS TO UL STD 471
Intertek CONFORMS TO NSF STD 7
EISA