STEEL WORKS

16 Gauge Stainless Steel Drop-In Sink

FEATURES

- Made of high quality 16-gauge, type 304 stainless steel
- Faucet holes pre-punched on 4" centers (faucet Included)
- 3 1/2" IPS drain connection
- Drain Basket included
- 3/8" Marine Edge
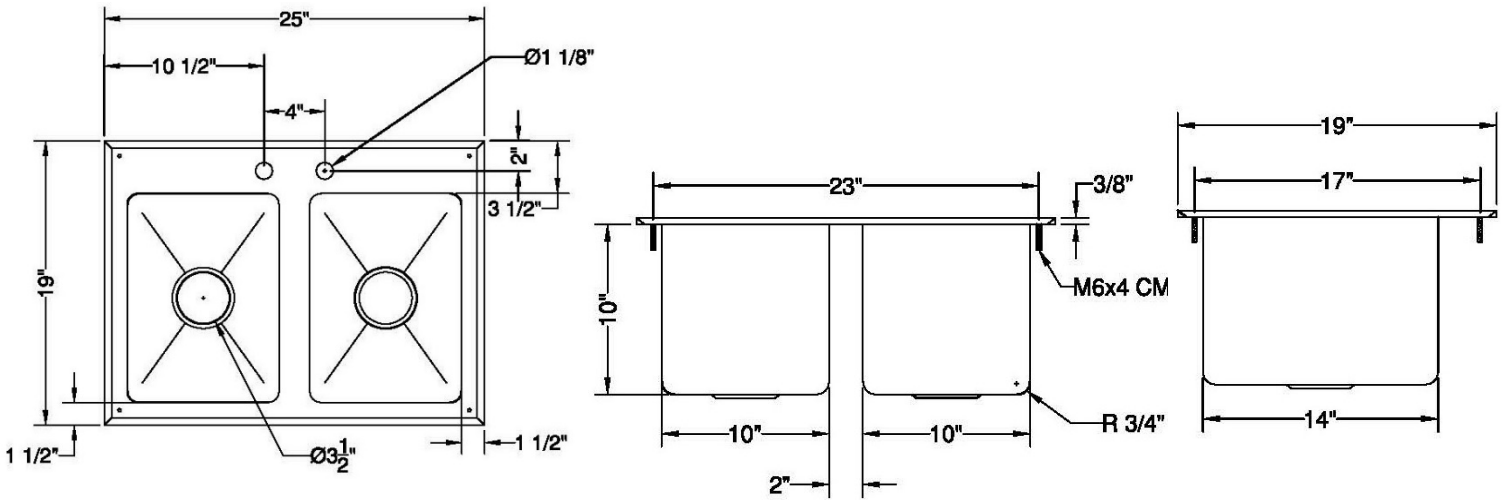
ITEM	LENGTH	DEPTH	TOTAL HEIGHT	BOWL DEPTH	BOWL L to R	BOWL F to B
SWDIS-2FB101410	25"	19"	10"	10"	10"	14"