STANDARD FEATURES

HESTAN

RISERS AND SHELVES

- Heavy gauge welded body construction
- Durable attachment design to allow complete horizontal movement of the shelves along the length of the riser *(Patent Pending)*
- Stainless front and sides
- Lift-off flue cap for ease of cleaning
- Mounts to all Hestan rangetop models
- Available in 4 different heights: Island Trim (IT), Low Riser (LR), Mid Riser (MR), and Tall Riser (TR)
- Island Trim is ideal for island suite installations to minimize blocking of views

Over Hanging Shelves

Tubular Shelf

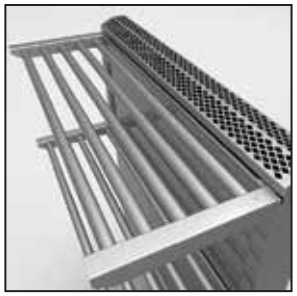

- Mid Riser and Tall Risers are available with shelves:
  - Heavy duty, stainless steel (solid or tubular) welded removable shelf inserts for ease of cleaning
  - Solid or tubular shelves are interchangeable
  - Fully welded shelf end caps for shelf support
  - Removable shelf end caps for cleaning
  - Ability to place shelves anywhere on the line
- Tall Risers are available with single or double shelves
- 22" vertical clearance from closest shelf to cooking surface
- All risers come standard with horizontal stiffener for maximum support and rigidity
- Available from 12" to 108" wide standard configurations
- Standard size of shelves from 12" to 48" wide

OPTIONS

- Custom widths of risers and shelves
- Stainless steel back
- Pot filler attachment
- Electrical outlet

Model number as shown HTR36 & HDMS36

AUTODESK REVIT

Island Trim

Wall Mounted

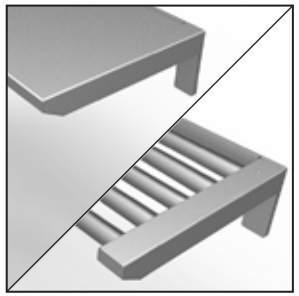

KITCHEN INNOVATIONS 2015 AWARD
NATIONAL RESTAURANT ASSOCIATION RESTAURANT, HOTEL-MOTEL SHOW

RISERS AND SHELVES

www.hestancommercial.com phone 888.9057463 3375 E. La Palma Ave., Anaheim, CA 92806

RISERS AND SHELVES

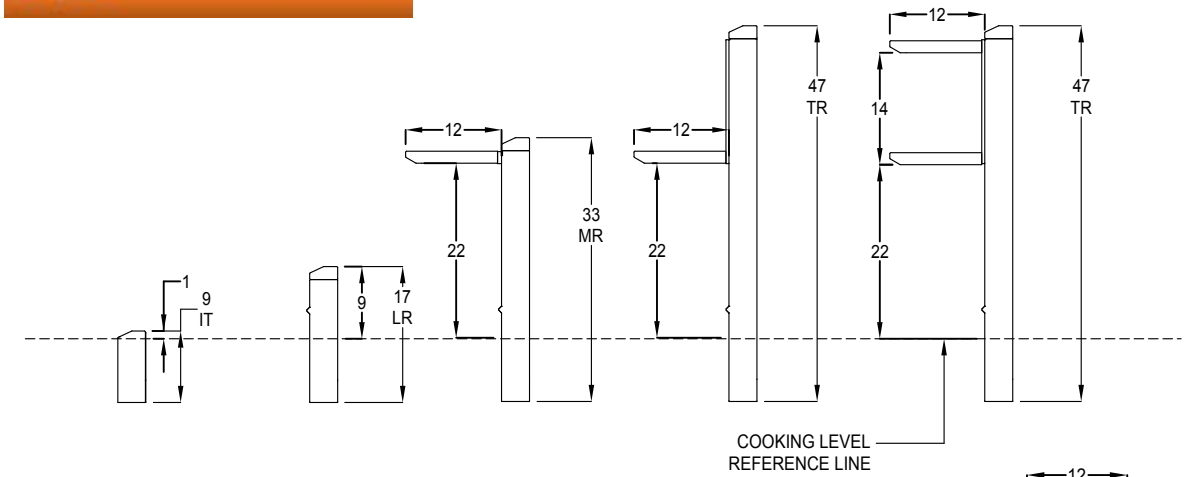

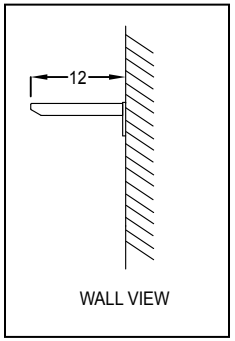

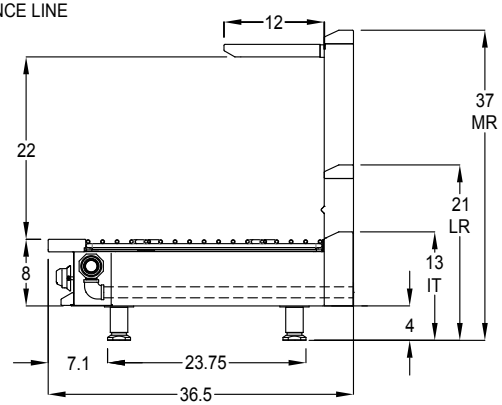

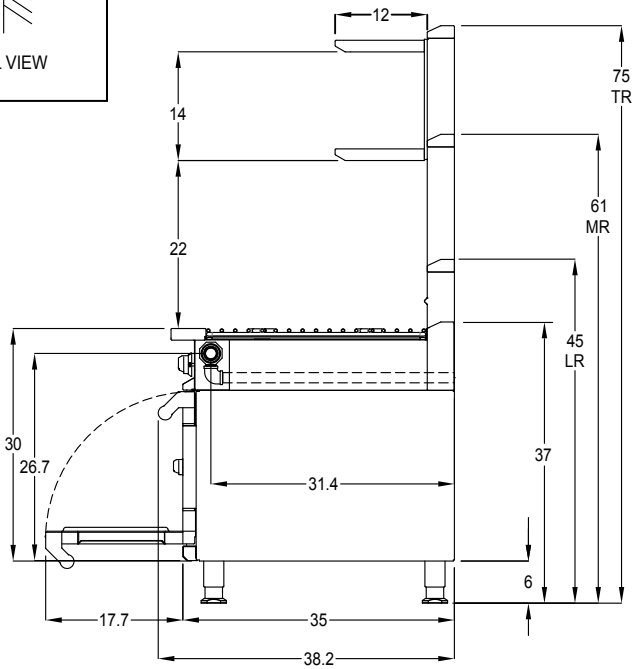

Model	Description	Approx SHP WT
H__xx	xx" wide__	TBD

xx = 12, 18, 24, 30, 36, 48, 54, 60, 72, 84, 90, 96, 102, 108

__ = IT for Island Trim

LR for Low Riser	STT	Single Top Tubular Shelf
LRF for Low Riser for Fryer	STTW	Single Top Tubular Wall Shelf
LRP for Low Riser for Pasta Cooker	STS	Single Top Solid Shelf
MR for Mid Riser	STSW	Single Top Solid Wall Shelf
MRF for Mid Riser for Fryer	SBT	Single Bottom Tubular Shelf
MRP for Mid Riser for Pasta Cooker	SBS	Single Bottom Solid Shelf
TR for Tall Riser	DTS	Double Tubular Shelves
TRF for Tall Riser for Fryer	DSS	Double Solid Shelves
TRP for Tall Riser for Pasta Cooker	DMS	Double Mixed Shelves

ELECTRICAL : No electrical requirement

GAS : No gas requirement

VENTILATION : No ventilation requirement

Note: Hestan Commercial products are not approved or recommended for residential use. Hestan Commercial Corporation reserves the right to change materials and specifications without notice. Specify type of gas when ordering. Specify altitude when above 2,000 ft.

CONTACT US: www.hestancommercial.com phone 888.905.7463 3375 E. La Palma Ave., Anaheim, CA 92806