Job: _____ Item#_____

SC-2S

Steam Coil Compartment Steamer
with Cabinet Base

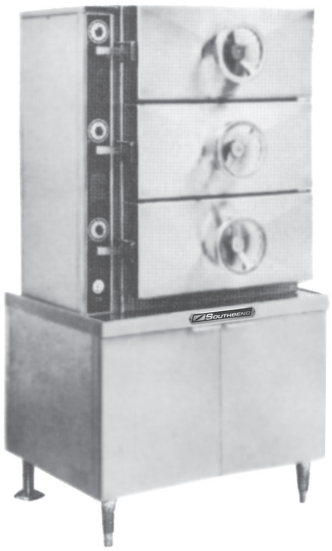

OPERATION SHALL BE BY:

Steam coil heated steam boiler operating at 9-11 psi (62-76 kPa).

The boiler shall be equipped for operation on incoming steam pressure of 25-45 psi (170-310 kPa) and a flow of 200 lbs. (90kg) per hour.

The controls shall be equipped for operation on:

- ❑ 115 VAC, 1 Phase, 60 Hz

STANDARD FEATURES:

- Water Treatment System
- Split water line (boiler feed and condensate)
- Automatic blowdown.
- Water in "Y" strainer (condenser feed)

Pan Capacity per Compartment, 12" x 20"				
Model	Pan Depth			
	1"	2-1/2"	4"	6"
SC-2S	14	6	4	2
SC-3S				

OPTIONS & ACCESSORIES AT ADDITIONAL COST

- ❑ 220-240 VAC operation (specify voltage) (GBVS-1)
- ❑ Stainless steel back panel (SSB-)
- ❑ Stainless steel frame (SSF-)
- ❑ Correctional package
- ❑ Single pantry spray hose and bracket
- ❑ Double pantry spray hose and bracket
- ❑ Ball float trap (BFT)
- ❑ Sheet pan supports (SPS-PC1 or SPS-PC2)
- ❑ Wire shelf rack (SSR-PC)

STANDARD CONSTRUCTION SPECIFICATIONS

Shall be a Southbend Steam model SC-2S or SC-3S, pressure compartment cooker with steam coil steam boiler, c-CSA-us and NSF Certified, ASME code stamped and National Board registered.

The cooker shall be constructed of all-welded type 304 #4 finished stainless steel.

The doors shall have a removable inner liner of aluminum plate with full perimeter gasket seal, an outer shell of one piece welded stainless steel, and a wheel-and-screw closing mechanism.

The doors, with a clear opening of 10-1/4" x 26-3/8" (260 mm x 670 mm) shall latch upon closing and open 180° upon latch release.

Compartment operation shall be at a maximum pressure of 6 psi (41 kPa).

Each compartment shall be provided with universal pan supports.

Each optional sliding shelf will support two full size (1/1 gastronorm) pans.

The control housing shall be constructed of #4 finish stainless steel with a full-access removable panel.

Each compartment shall be independently controlled by an automatic timer control with visible and audible signals.

At the end of the cooking cycle, the controls automatically shut off and exhaust the incoming steam, drain the condensate from the compartment, and sound a continuous audible signal until turned off manually.

Standard features include a water treatment system, automatic boiler blow down, and split water line.

The compartment cooker shall be mounted on a cabinet base with full perimeter angle frame, reinforced counter, steam coil boiler complete with controls, hinged doors and 6" (152 mm) stainless steel legs fitted with 4 adjustable flanged feet for securing to the floor.

Exterior shall be stainless steel #4 finish with removable side panels for easy access to boiler.

SEE REVERSE SIDE OF SPEC SHEET FOR WATER TREATMENT SYSTEM STATEMENTS

Approval Notes: _____

70 Oakdale Road, Toronto ON, Canada M3N IV9
(919) 762-1000 www.crownsteamgroup.com

Printed in USA Date:_____

Models: ☐ **SC-2S** ☐ **SC-3S**

SC-2S

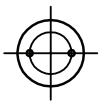

REAR FLANGED FOOT DETAIL
2 EQUALLY SPACED
ø7/16" [11mm] HOLES
ON 2.5" [63mm] B.C.

DIMENSIONS

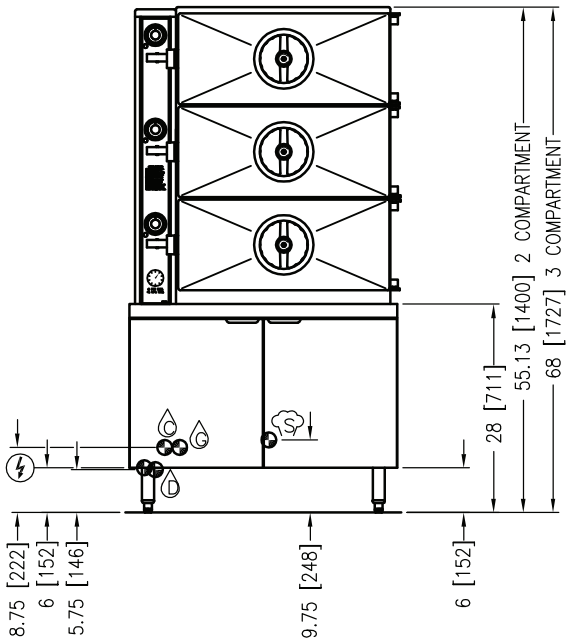

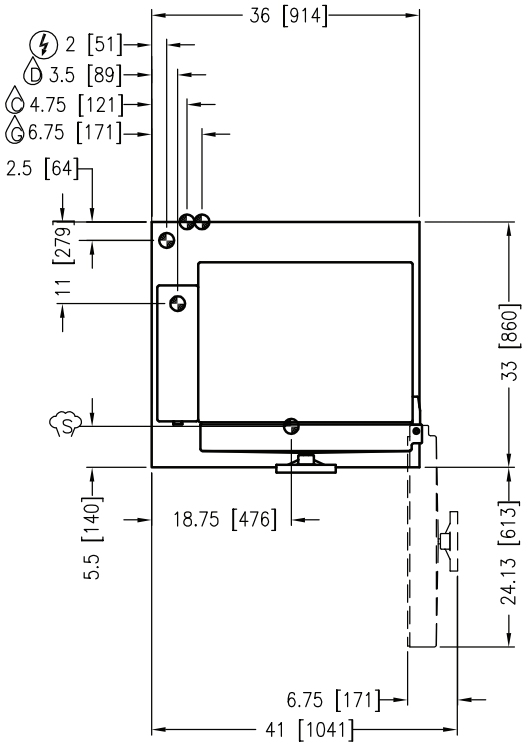

SERVICE CONNECTIONS

– ELECTRICAL CONNECTION: 1/2" *(13 mm)* conduit connection to controls.
2 Amps per compartment, 120-60-1 or 220-50-1.

– BOILER FEED WATER: 1/2" (13 mm) O.D. tubing at 25-50 psi (170-345 kPa).

– CONDENSATE: COLD WATER: 1/2" (13 mm) O.D. tubing at 25-50 psi (170-345 kPa).

– DRAIN: 2" (51 mm) IPS piped to open floor drain. No solid connection.

– STEAM TAKE-OFF CONNECTION: 3/4" (19 mm) IPS optional to operate adjacent equipment.

WATER QUALITY STATEMENT

Water is the essential ingredient in steam equipment, water quality is the major factor affecting the performance of your appliance. Crown Steam Group offers a Comprehensive Water Treatment System which exceeds our minimum water requirements. Proof of installation and proper cartridges replacement is required for warranty coverage. Water supply to Crown Steam Group steamers must be within these guidelines.

Total dissolved solids	Less than 60 PPM
Total alkalinity	Less than 20 PPM
Silica	Less than 13 PPM
Chlorine	Less than 1.5 PPM
pH Factor	6.8 - 7.3

Water which does not meet these standards should be treated with the installation of Middleby's Water Treatment System. Call 919-762-1000 if you have questions concerning your water meeting these parameters.
*Failure or malfunction of this appliance due to poor water quality is not covered under warranty.
Reference www.crownsteamgroup.com for complete warranty details and instructions.

INTENDED FOR COMMERCIAL USE ONLY.
NOT FOR HOUSEHOLD USE.

70 Oakdale Road, Toronto ON, Canada M3N IV9
(919) 762-1000 www.crownsteamgroup.com

Printed in USA Date:_____